Work Order ID 66924

Wednesday, March 02, 2011 3:01:24 PM

POSITIVE RECALL

Item ID: D350-748-101 **Accept** **Setup Start** **Stop**

Revision ID:

Item Name: Crosstube Installation, High Fwd

Start Date: 3/2/2011 **Start Qty:** 1.00 **Cust Item ID:**

Required Date: 3/23/2011 **Req'd Qty:** 1.00 **Customer:**

Reference:

Approvals: **Process Plan:** [illegible] **Date:** 11-03-2 **Tooling:** _____ **Date:** _____ **Run Start** **Stop**

QC: _____ **Date:** _____ **SPC (Y/N):** _____ **Date:** _____

Sequence ID/ Work Center ID	Operation Description	Set Up/ Run Hours	Tool ID	Tool #	Plan Code	Accept Qty	Reject Qty	Reject Number	Insp. Stamp
Draw Nbr	**Revision Nbr**								
D350-748-141	F								
100	DOCUMENT CONTROL	0.00							
DC	**Memo**	0.00							
Document Control	Photocopy bluefile & type labels per PPPD350-748-101		CHG002						
110	BENDING MACHINE - CROSSTUBES	0.00							
CNC Bend 1	**Memo**	0.00							
CNC Delta 100 Bender	Bend tube as per Dwg D350-748-141 using CNC bender program D350F and Folio FT_____								
120	QC15- Crosstube Dimensional Check	0.00							
QC	**Memo**	0.00							
Quality Control									

for MLT 11-16-10

DP 11-10-5

11.10-06

B6692

P70

Dart Aerospace Ltd

W/O: 66924	WORK ORDER CHANGES						
DATE	STEP	PROCEDURE CHANGE	By	Date	Qty	Approval Chief Eng / Prod Mgr	Approval QC Inspector

Part No: D350-748-101 PAR #: N/A Fault Category: X tube NCR: Yes No DQA: ✓ Date: 11/11/15

11-974 Resolution: Rework Disposition: Rework QA: N/C Closed: CK Date: 11/11/10

NCR: 11	WORK ORDER NON-CONFORMANCE (NCR)							
DATE	STEP	Description of NC Section A	Corrective Action Section B: Initial Chief Eng	Action Description Chief Eng	Sign & Date	Verification Section C	Approval Chief Eng	Approval QC Inspector
11.10.05	110	One side bent too high. 23.57" process	CP 11.10.05 QS1042	Cut high cuff 0.13" to 0.2"	BT 11.10.06	CP 11.10.05	CP 11.10.05 QS1042	11/10/06

NOTE: Date & initial all entries

H:\fFORMS\Quality Assurance\approved QA\NCRWO RevE

Work Order ID 66924

Wednesday, March 02, 2011 3:01:24 PM

Item ID: D350-748-101 **Accept** **Setup Start** **Stop**

Revision ID:

Item Name: Crosstube Installation, High Fwd

Start Date: 3/2/2011 **Start Qty:** 1.00 **Cust Item ID:**

Required Date: 3/23/2011 **Req'd Qty:** 1.00 **Customer:**

Reference:

Run Start **Stop**

Approvals: **Process Plan:** _____ **Date:** _____ **Tooling:** _____ **Date:** _____

QC: _____ **Date:** _____ **SPC (Y/N):** _____ **Date:** _____

Sequence ID/ Work Center ID	Operation Description	Set Up/ Run Hours	Tool ID	Tool #	Plan Code	Accept Qty	Reject Qty	Reject Number	Insp. Stamp
125		0.00							
HandFXtube	**Memo**	0.00				1	3	11-10-05	
Hand Finishing Crosstubes	***Stress relief*** Heat treat crosstube as per QSI010 4.3 Temp: 375 Start time: 9 16:45 Finish time: 20:45								
127	QC6- Inspect dimensions to drawing	0.00							
QC	**Memo**	0.00							
Quality Control									

Suitable

Dart Aerospace Ltd

W/O:		WORK ORDER CHANGES					
DATE	STEP	PROCEDURE CHANGE	By	Date	Qty	Approval Chief Eng / Prod Mgr	Approval QC Inspector

Part No: _____ **PAR #:** _____ **Fault Category:** _____ **NCR:** Yes No **DQA:** _____ **Date:** _____

Resolution: _____ **Disposition:** _____ **QA: N/C Closed:** _____ **Date:** _____

NCR:		WORK ORDER NON-CONFORMANCE (NCR)						
DATE	STEP	Description of NC Section A	Corrective Action Section B			Verification Section C	Approval Chief Eng	Approval QC Inspector
			Initial Chief Eng	Action Description Chief Eng	Sign & Date			

NOTE: Date & initial all entries

H:\fFORMS\Quality Assurance\approved QA\NCRWO RevE

Work Order ID 66924

Wednesday, March 02, 2011 3:01:24 PM

Item ID: D350-748-101 **Accept** **Setup Start**

Revision ID: **Stop**

Item Name: Crosstube Installation, High Fwd

Start Date: 3/2/2011 **Start Qty:** 1.00 **Cust Item ID:**

Required Date: 3/23/2011 **Req'd Qty:** 1.00 **Customer:**

Reference:

Run Start

Approvals: **Process Plan:** _____ **Date:** _____ **Tooling:** _____ **Date:** _____ **Stop**

QC: _____ **Date:** _____ **SPC (Y/N):** _____ **Date:** _____

Sequence ID/ Work Center ID	Operation Description	Set Up/ Run Hours	Tool ID	Tool #	Plan Code	Accept Qty	Reject Qty	Reject Number	Insp. Stamp
130		0.00							
Crosstubes	Crosstubes								
Crosstubes	**Memo**	0.00							
	1-Drill Tube as per Dwg D350-748-141 Using DT8876 A,B &C Drill Jigs, Set-up drill table as per QSI 010								
	2-Deburr								
	3-Engrave Part # and Batch # as per Dwg D350-748-141								
	4-Remove all marks from tube within limits of D350-748-141								
	5- Apply a light coat of LPS3 on the interior of tube Batch: M109956								
140	QC5- Inspect part completeness to step on W/O	0.00							
QC	**Memo**	0.00							
Quality Control	CHECK 10 DEG HOLES WITH DT8876E (EUROCOPTER CLAMP)								

AT 11.10.06

JW 11-10-06

Sulio07

Dart Aerospace Ltd

W/O:		WORK ORDER CHANGES					
DATE	STEP	PROCEDURE CHANGE	By	Date	Qty	Approval Chief Eng / Prod Mgr	Approval QC Inspector

Part No: _____ **PAR #:** _____ **Fault Category:** _____ **NCR:** Yes No **DQA:** _____ **Date:** _____

Resolution: _____ **Disposition:** _____ **QA: N/C Closed:** _____ **Date:** _____

NCR:		WORK ORDER NON-CONFORMANCE (NCR)						
DATE	STEP	Description of NC Section A	Corrective Action Section B			Verification Section C	Approval Chief Eng	Approval QC Inspector
			Initial Chief Eng	Action Description Chief Eng	Sign & Date			

NOTE: Date & initial all entries

H:\fFORMS\Quality Assurance\approved QA\NCRWO RevE

Work Order ID 66924

Wednesday, March 02, 2011 3:01:24 PM

Item ID: D350-748-101 **Accept** **Setup Start** **Stop**

Revision ID:

Item Name: Crosstube Installation, High Fwd

Start Date: 3/2/2011 **Start Qty:** 1.00 **Cust Item ID:**

Required Date: 3/23/2011 **Req'd Qty:** 1.00 **Customer:**

Reference:

Run Start **Stop**

Approvals: **Process Plan:** _____ **Date:** _____ **Tooling:** _____ **Date:** _____

QC: _____ **Date:** _____ **SPC (Y/N):** _____ **Date:** _____

Sequence ID/ Work Center ID	Operation Description	Set Up/ Run Hours	Tool ID	Tool #	Plan Code	Accept Qty	Reject Qty	Reject Number	Insp. Stamp
150	Outsource process-Cadplate per QSI017 4.1.9.1	0.00							
Outsource3	**Memo**	0.00					R 11-10-11		
Outsource process - Cad plate	Issue P/O: 15117 Stress relief at 375° for 5 hours Magnetic Particle Inspect per ASTM E1444 Cadium Plate per AMS-QQ-P-416B, Class 1, Type 2 Embrittle relief at 375° for 8 hours, Chromate Treat Possibe Supplier: Southwest United Industries Ensure Certificate of Conformity is attached								
160	Receive & Inspect for Damage & Mat'l Certs	0.00							
Packaging	**Memo**	0.00							
Packaging	Ensure certificate of conformity is attached								
170	QC5- Inspect part completeness to step on W/O	0.00							
QC	**Memo**	0.00							
Quality Control									

☆ SEE W/O CHG ATTACHED

POSITIVE RECALL
EFFECTIVE 11.10.11 AUTH _____ 11 . 11 . 03
RELEASED _____ DATE 11.4.11

issue P/O to Cocuren for NDT as per QSI 038 P/O: 15359 CZ 11/11/03

rec'd + inspect + attached full report to w/o

Dart Aerospace Ltd

W/O: 66924

WORK ORDER CHANGES

DATE	STEP	PROCEDURE CHANGE	By	Date	Qty	Approval Chief Eng / Prod Mgr	Approval QC Inspector

Part No: D350-748-101 PAR #: N/A Fault Category: X-tube NCR: Yes No DQA: [illegible] Date: 11.11.14

Resolution: Rework Disposition: Rework QA: N/C Closed: [illegible] Date: 11/11/15

NCR: 11975

WORK ORDER NON-CONFORMANCE (NCR)

DATE	STEP	Description of NC Section A	Corrective Action Section B: Initial Chief Eng	Action Description Chief Eng	Sign & Date	Verification Section C	Approval Chief Eng	Approval QC Inspector
11.11.04	150	Series of marks on tube noticed during load testing. NC: process	CP 11.11.04 QS1042	Buff out marks, inspect surface, re-CAD area.	[illegible] 11-11-07	[illegible] 11/11/07	CP 11.11.04 QS1042	[illegible] 11-11-07

NOTE: Date & initial all entries

H:\fFORMS\Quality Assurance\approved QA\NCRWO RevE

Dart Aerospace Ltd

W/O: 69924

WORK ORDER CHANGES

DATE	STEP	PROCEDURE CHANGE	By	Date	Qty	Approval Chief Eng / Prod Mgr	Approval QC Inspector
11.10.05	161	LOAD TUBE TO 3500 lb FOR 1 MINUTE. REF D.S. EMBIL. B/N 66924	GP	11.11.01	1	GP 11.11.01 OB1042	S 11/11/01
11.10.05	162	NDT TUBE.	OL	11/11/03	1	GP 11.11.01 OB1042	S 11/11/01

Part No: D350-7248-101 PAR #: _____ Fault Category: _____ NCR: Yes No DQA: _____ Date: _____

Resolution: _____ Disposition: _____ QA: N/C Closed: _____ Date: _____

WORK ORDER NON-CONFORMANCE (NCR)

NCR:

DATE	STEP	Description of NC Section A	Corrective Action Section B: Initial Chief Eng	Action Description Chief Eng	Sign & Date	Verification Section C	Approval Chief Eng	Approval QC Inspector

NOTE: Date & initial all entries

H:\FORMS\Quality Assurance\approved QA\NCRWO RevE

Chris Provencal

From: David Shepherd <dshepherd@dartaero.com>
Sent: Tuesday, April 27, 2010 3:40 PM
To: 'Mike Petsche'
Cc: 'Bill Beckett'; 'L Lacelle'; 'Chris Provencal'; 'Dan Stow'; ssheldon@dartaero.com
Subject: 350 crosstubes

Mike,

I discussed the 350 crosstube load testing with Bill a little while ago and this plan makes sense to him.

So, my recommendation to clear these crosstubes is to load the fwd crosstubes to 3500 lb and the aft crosstubes to 3000 lb in the deflection test rig and document on the work orders that this test has been completed. Hold max load for 1 minute. Per TP-D350-748-2, these loads represent the maximum load on these crosstubes at gross weight and are below the yield point of the material. I would like to request that Chris Provencal witness these tests and sign off the work orders based on his experience with Dart landing gears. My feeling is that if there is a problem with the parts, it will manifest itself during this load test. I, for one, would feel a lot more confident in testing each crosstube in this manner than relying totally on what Exova has to say. I think it would be very difficult to reach a conclusion on the whole batch on the basis of cracks in two parts from the batch.

I believe that we can accomplish this before next Friday, which also gives us time to hear what Exova has to say in case it has an impact on our decision. So far, what I have seen from Exova shows me that there are fluctuations in the heat treating but the tubes are heat treated to our specification.

For this reason, I believe we should tell DHS that it looks like we will be able to start shipping 350 crosstubes by May 7th pending a successful Engineering test of the material.

David.

Work Order ID 66924

Wednesday, March 02, 2011 3:01:24 PM

Item ID: D350-748-101 **Accept** **Setup Start**

Revision ID: **Stop**

Item Name: Crosstube Installation, High Fwd

Start Date: 3/2/2011 **Start Qty:** 1.00 **Cust Item ID:**

Required Date: 3/23/2011 **Req'd Qty:** 1.00 **Customer:**

Reference:

Run Start

Approvals: **Process Plan:** _____ **Date:** _____ **Tooling:** _____ **Date:** _____

Stop

QC: _____ **Date:** _____ **SPC (Y/N):** _____ **Date:** _____

Sequence ID/ Work Center ID	Operation Description	Set Up/ Run Hours	Tool ID	Tool #	Plan Code	Accept Qty	Reject Qty	Reject Number	Insp. Stamp
180	SprayPaint	0.00							
SprayPaint	**Memo**	0.00							
Spray Painting	1-Prime inside crosstube as per QSI 005 4.2 2-Prime Outside of Tube as per Dart QSI 005 4.2						11 - 11 - 08		
190	QC14- Inspect Spray Paint	0.00							
QC	**Memo**	0.00							
Quality Control	Then,Wrap in plastic bag to protect from scratches						11-11-10	1	
200	Crosstubes	0.00							
Crosstubes	**Memo**	0.00							
Crosstubes	1-Install Ground wire Insert,then insert screw and washer 2-Install Abraision strips as per Dwg D350-748-141 & QSI 035. 3-Install supports Using Dt8876 as per Dwg D350-748-141,Torque to 60-80 IN-LBS						11 - 11 - 10	1	

Dart Aerospace Ltd

W/O:		WORK ORDER CHANGES					
DATE	STEP	PROCEDURE CHANGE	By	Date	Qty	Approval Chief Eng / Prod Mgr	Approval QC Inspector

Part No: _____ **PAR #:** _____ **Fault Category:** _____ **NCR:** Yes No **DQA:** _____ **Date:** _____

Resolution: _____ **Disposition:** _____ **QA: N/C Closed:** _____ **Date:** _____

NCR:		WORK ORDER NON-CONFORMANCE (NCR)						
DATE	STEP	Description of NC Section A	Corrective Action Section B			Verification Section C	Approval Chief Eng	Approval QC Inspector
			Initial Chief Eng	Action Description Chief Eng	Sign & Date			

NOTE: Date & initial all entries

H:\fFORMS\Quality Assurance\approved QA\NCRWO RevE

Work Order ID 66924

Wednesday, March 02, 2011 3:01:24 PM

Item ID: D350-748-101 **Accept** **Setup Start** **Stop**

Revision ID:

Item Name: Crosstube Installation, High Fwd

Start Date: 3/2/2011 **Start Qty:** 1.00 **Cust Item ID:**

Required Date: 3/23/2011 **Req'd Qty:** 1.00 **Customer:**

Reference:

Approvals: **Process Plan:** _____ **Date:** _____ **Tooling:** _____ **Date:** _____ **Run Start** **Stop**

QC: _____ **Date:** _____ **SPC (Y/N):** _____ **Date:** _____

Sequence ID/ Work Center ID	Operation Description	Set Up/ Run Hours	Tool ID	Tool #	Plan Code	Accept Qty	Reject Qty	Reject Number	Insp. Stamp
210	QC5- Inspect part completeness to step on W/O	0.00							
QC	Memo	0.00 Salicio				(+1)			
Quality Control									
220	Pick Kit	0.00							
Packaging	Memo	0.00				SP	11-11-11		
Packaging									
230	QC4- 100% Inspect kits for completeness	0.00							
QC	Memo	0.00 Salicio							
Quality Control									

Dart Aerospace Ltd

W/O:		WORK ORDER CHANGES					
DATE	STEP	PROCEDURE CHANGE	By	Date	Qty	Approval Chief Eng / Prod Mgr	Approval QC Inspector

Part No: _____ **PAR #:** _____ **Fault Category:** _____ **NCR:** Yes No **DQA:** _____ **Date:** _____

Resolution: _____ **Disposition:** _____ **QA: N/C Closed:** _____ **Date:** _____

NCR:		WORK ORDER NON-CONFORMANCE (NCR)						
DATE	STEP	Description of NC Section A	Corrective Action Section B			Verification Section C	Approval Chief Eng	Approval QC Inspector
			Initial Chief Eng	Action Description Chief Eng	Sign & Date			

NOTE: Date & initial all entries

H:\fFORMS\Quality Assurance\approved QA\NCRWO RevE

Work Order ID 66924

Wednesday, March 02, 2011 3:01:24 PM

Item ID: D350-748-101 **Accept** **Setup Start** **Stop**

Revision ID:

Item Name: Crosstube Installation, High Fwd

Start Date: 3/2/2011 **Start Qty:** 1.00 **Cust Item ID:**

Required Date: 3/23/2011 **Req'd Qty:** 1.00 **Customer:**

Reference:

Run Start **Stop**

Approvals: **Process Plan:** _____ **Date:** _____ **Tooling:** _____ **Date:** _____

QC: _____ **Date:** _____ **SPC (Y/N):** _____ **Date:** _____

Sequence ID/ Work Center ID	Operation Description	Set Up/ Run Hours	Tool ID	Tool #	Plan Code	Accept Qty	Reject Qty	Reject Number	Insp. Stamp
240	Packaging	0.00							
Packaging									
Packaging	**Memo**	0.00							
Packaging	Identify and pack for shipping as per PPP D350-748-101 Location:_____ PPP Rev:_____								
250	QC21- Final Inspection - Work Order Release	0.00							
QC	**Memo**	0.00							
Quality Control									

11/11/11

11-11-11

Dart Aerospace Ltd

W/O:		WORK ORDER CHANGES					
DATE	STEP	PROCEDURE CHANGE	By	Date	Qty	Approval Chief Eng / Prod Mgr	Approval QC Inspector

Part No: _____ **PAR #:** _____ **Fault Category:** _____ **NCR:** Yes No **DQA:** _____ **Date:** _____

Resolution: _____ **Disposition:** _____ **QA: N/C Closed:** _____ **Date:** _____

NCR:		WORK ORDER NON-CONFORMANCE (NCR)						
DATE	STEP	Description of NC Section A	Corrective Action Section B			Verification Section C	Approval Chief Eng	Approval QC Inspector
			Initial Chief Eng	Action Description Chief Eng	Sign & Date			

NOTE: Date & initial all entries

H:\fFORMS\Quality Assurance\approved QA\NCRWO RevE

Picklist Print

Wednesday, March 02, 2011 3:01:30 PM

6

Work Order ID: 66924

Parent Item: D350-748-101

Parent Item Name: Crosstube Installation, High Fwd

Start Date: 3/2/2011 **Required Date:** 3/23/2011

Start Qty: 1.00 **Required Qty:** 1.00

Comments:
IPP Rev:A New Issue 06-07-05 JLM
IPP Rev:B Update qty of MS21042L5 06-09-12 KJ
IPP Rev:C Rev B 07-11-15 DD
IPP Rev D Combined manufacturing 08.04.02 EC verified by: DD
IPP Rev:E 08-06-24 revD as per dwg DD verified by:EC IPP Rev:F
10.08.04 added QSI010 4.3 DD verf:EC

Component Item ID/ Item Name	Replacement Item ID	Mfg/ Purch	Bin Item	Primary Location	Last Location	Route Seq ID	Unit of Measure	Qty on Hand	Qty per Kit	Total Qty	Qty Issued	Date Issued	Status
D350-748-141TRN Crosstube Turning Detail		Manufactured	No			110 B72817	Each	0.0000	1	1 SAD		11-10-04	
ALS4-1032-225 Insert		Purchased	No			200	Each	3,839.000	1	1		11.11.10	
AN960JD10 Washer	NAS1149D0363J	Purchased	No			200	Each	24.0000	1	1		11/11/10	

B# 118696

Location		Loc Qty	Loc Code
PK011		3839	
	110768	3839	

Location		Loc Qty	Loc Code
ST		6	
	107715	6	
ST335		18	
	105792	2	
	112279	16	

B# 118968

Dart Aerospace Ltd

W/O:		WORK ORDER CHANGES					
DATE	STEP	PROCEDURE CHANGE	By	Date	Qty	Approval Chief Eng / Prod Mgr	Approval QC Inspector

Part No: _____ **PAR #:** _____ **Fault Category:** _____ **NCR:** Yes No **DQA:** _____ **Date:** _____

Resolution: _____ **Disposition:** _____ **QA: N/C Closed:** _____ **Date:** _____

NCR:		WORK ORDER NON-CONFORMANCE (NCR)						
DATE	STEP	Description of NC Section A	Corrective Action Section B			Verification Section C	Approval Chief Eng	Approval QC Inspector
			Initial Chief Eng	Action Description Chief Eng	Sign & Date			

NOTE: Date & initial all entries

H:\fFORMS\Quality Assurance\approved QA\NCRWO RevE

Picklist Print

Wednesday, March 02, 2011 3:01:30 PM

Work Order ID: 66924

Parent Item: D350-748-101

Parent Item Name: Crosstube Installation, High Fwd

Start Date: 3/2/2011 **Required Date:** 3/23/2011

Start Qty: 1.00 **Required Qty:** 1.00

D2856-400	Manufactured	No	200	f	158.4380	1.181	1.243158		11/11/10
Abraison Strip									

B# 71164

Location	Loc Qty	Loc Code
ST403	158.4380421	
56626	0.00004211	
59920	43.381	
63735	115.057	

D3502-1	Manufactured	No	200	Each	32.0000	2	2		11/11/10
Support									

Location	Loc Qty	Loc Code
ST063	32	
52903	1	
61206	12	
61843	9	
64004	10	

B# 68951

MS21920-20	Purchased	No	200	Each	61.0000	2	2		11-11-10
Clamp (per MIL-DTL-8783C)									

Location	Loc Qty	Loc Code
LG	61	
112624	2	
114687	1	
115736	8	
116799	50	

B# 118649

Dart Aerospace Ltd

W/O:		WORK ORDER CHANGES					
DATE	STEP	PROCEDURE CHANGE	By	Date	Qty	Approval Chief Eng / Prod Mgr	Approval QC Inspector

Part No: _____ **PAR #:** _____ **Fault Category:** _____ **NCR:** Yes No **DQA:** _____ **Date:** _____

Resolution: _____ **Disposition:** _____ **QA: N/C Closed:** _____ **Date:** _____

NCR:		WORK ORDER NON-CONFORMANCE (NCR)						
DATE	STEP	Description of NC Section A	Corrective Action Section B			Verification Section C	Approval Chief Eng	Approval QC Inspector
			Initial Chief Eng	Action Description Chief Eng	Sign & Date			

NOTE: Date & initial all entries

H:\fFORMS\Quality Assurance\approved QA\NCRWO RevE

Picklist Print

Wednesday, March 02, 2011 3:01:30 PM

Work Order ID: 66924

Parent Item: D350-748-101

Parent Item Name: Crosstube Installation, High Fwd

Start Date: 3/2/2011 **Required Date:** 3/23/2011

Start Qty: 1.00 **Required Qty:** 1.00

MS27039-1-10	Purchased	No	200	Each	84.0000	1	1	
Screw								

B# 118612

Location		Loc Qty	Loc Code
ST291		84	
	112794	3	
	115935	81	

AN4-41A	Purchased	No	220	Each	200.0000	8	8	
Bolt								

M116191

Location		Loc Qty	Loc Code
ST360		200	
	115108	100	
	115705	50	
	116191	50	

AN4-6A	Purchased	No	220	Each	1,674.000	16	16	
Bolt								

M119127 SP 11-11-11

Location		Loc Qty	Loc Code
ST356		1674	
	112933	96	
	113149	17	
	115108	8	
	115457	253	
	115936	200	
	116191	300	
	116400	400	
	116924	400	

Dart Aerospace Ltd

W/O:		WORK ORDER CHANGES					
DATE	STEP	PROCEDURE CHANGE	By	Date	Qty	Approval Chief Eng / Prod Mgr	Approval QC Inspector

Part No: _____ **PAR #:** _____ **Fault Category:** _____ **NCR:** Yes No **DQA:** _____ **Date:** _____

Resolution: _____ **Disposition:** _____ **QA: N/C Closed:** _____ **Date:** _____

NCR:		WORK ORDER NON-CONFORMANCE (NCR)						
DATE	STEP	Description of NC Section A	Corrective Action Section B			Verification Section C	Approval Chief Eng	Approval QC Inspector
			Initial Chief Eng	Action Description Chief Eng	Sign & Date			

NOTE: Date & initial all entries

H:\fFORMS\Quality Assurance\approved QA\NCRWO RevE

Picklist Print

Wednesday, March 02, 2011 3:01:31 PM

Work Order ID: 66924

Parent Item: D350-748-101

Parent Item Name: Crosstube Installation, High Fwd

Start Date: 3/2/2011 **Required Date:** 3/23/2011

Start Qty: 1.00 **Required Qty:** 1.00

AN5-32A Bolt		Purchased	No	220	Each	149.0000	4	4	M118422 SP

Location	Loc Qty	Loc Code
ST340	149	
115016	38	
115108	50	
115589	60	
115698	1	

AN960JD416 Washer	NAS1149D0463J	Purchased	No	220	Each	30.0000	32	32	M119097 SP

Location	Loc Qty	Loc Code
ST300	24	
113288	24	
ST356	6	
115622	6	

AN960JD516 Washer	NAS1149D0563J	Purchased	No	220	Each	34.0000	8	8	M118206 SP 11-11-11

Location	Loc Qty	Loc Code
ST	34	
103694	18	
107534	12	
109287	4	

Dart Aerospace Ltd

W/O:		WORK ORDER CHANGES					
DATE	STEP	PROCEDURE CHANGE	By	Date	Qty	Approval Chief Eng / Prod Mgr	Approval QC Inspector

Part No: _____ **PAR #:** _____ **Fault Category:** _____ **NCR:** Yes No **DQA:** _____ **Date:** _____

Resolution: _____ **Disposition:** _____ **QA: N/C Closed:** _____ **Date:** _____

NCR:		WORK ORDER NON-CONFORMANCE (NCR)						
DATE	STEP	Description of NC Section A	Corrective Action Section B			Verification Section C	Approval Chief Eng	Approval QC Inspector
			Initial Chief Eng	Action Description Chief Eng	Sign & Date			

NOTE: Date & initial all entries

H:\fFORMS\Quality Assurance\approved QA\NCRWO RevE

Picklist Print

Wednesday, March 02, 2011 3:01:31 PM

Work Order ID: 66924

Parent Item: D350-748-101

Parent Item Name: Crosstube Installation, High Fwd

Start Date: 3/2/2011 **Required Date:** 3/23/2011

Start Qty: 1.00 **Required Qty:** 1.00

D3500-1	Manufactured	No	220	Each	37.0000	4	4	B73407 SP.
Saddle								

Location		Loc Qty	Loc Code
ST243		20	
	62207	20	
ST424		2	
	55605	2	
ST425		15	
	61838	15	

D3501-1	Manufactured	No	220	Each	202.0000	16	16	B73891 SP.
Bushing								

Location		Loc Qty	Loc Code
ST063		202	
	45402	15	
	45918	112	
	48268	3	
	53779	5	
	61984	67	

MS21042L4	Purchased	No	220	Each	4,871.000	24	24	M118927 SP 11-11-11
Nut								

Location		Loc Qty	Loc Code
ST300		4871	
	1123143	2	
	115589	10	
	115621	20	
	116188	2839	
	116823	2000	

Dart Aerospace Ltd

W/O:		WORK ORDER CHANGES					
DATE	STEP	PROCEDURE CHANGE	By	Date	Qty	Approval Chief Eng / Prod Mgr	Approval QC Inspector

Part No: _____ **PAR #:** _____ **Fault Category:** _____ **NCR:** Yes No **DQA:** _____ **Date:** _____

Resolution: _____ **Disposition:** _____ **QA: N/C Closed:** _____ **Date:** _____

NCR:		WORK ORDER NON-CONFORMANCE (NCR)						
DATE	STEP	Description of NC Section A	Corrective Action Section B			Verification Section C	Approval Chief Eng	Approval QC Inspector
			Initial Chief Eng	Action Description Chief Eng	Sign & Date			

NOTE: Date & initial all entries

H:\fFORMS\Quality Assurance\approved QA\NCRWO RevE

Picklist Print

Wednesday, March 02, 2011 3:01:31 PM

Work Order ID: 66924

Parent Item: D350-748-101

Parent Item Name: Crosstube Installation, High Fwd

Start Date: 3/2/2011 **Required Date:** 3/23/2011

Start Qty: 1.00 **Required Qty:** 1.00

MS21042L5	Purchased	No	220	Each	998.0000	4	4
Nut							

m118910 SP 11-11-11

Location		Loc Qty	Loc Code
ST139		26	
	114813	26	
ST300		972	
	115594	276	
	116105	496	
	116548	200	

Dart Aerospace Ltd

W/O:		WORK ORDER CHANGES					
DATE	STEP	PROCEDURE CHANGE	By	Date	Qty	Approval Chief Eng / Prod Mgr	Approval QC Inspector

Part No: _____ **PAR #:** _____ **Fault Category:** _____ **NCR:** Yes No **DQA:** _____ **Date:** _____

Resolution: _____ **Disposition:** _____ **QA: N/C Closed:** _____ **Date:** _____

NCR:		WORK ORDER NON-CONFORMANCE (NCR)						
DATE	STEP	Description of NC Section A	Corrective Action Section B			Verification Section C	Approval Chief Eng	Approval QC Inspector
			Initial Chief Eng	Action Description Chief Eng	Sign & Date			

NOTE: Date & initial all entries

H:\fFORMS\Quality Assurance\approved QA\NCRWO RevE

DART AEROSPACE LTD	Work Order:	66924
Description: Crosstube High Fwd (AS350/355)	Part Number:	D350-748-101
Inspection Dwg: D350-748-141 **Rev:** E		Page 1 of 1

Required Dimension	Min	Max
Height	23.13	23.37
1/2 Span	40.78	41.02
Angle	75	77
Total Span	81.56	82.04

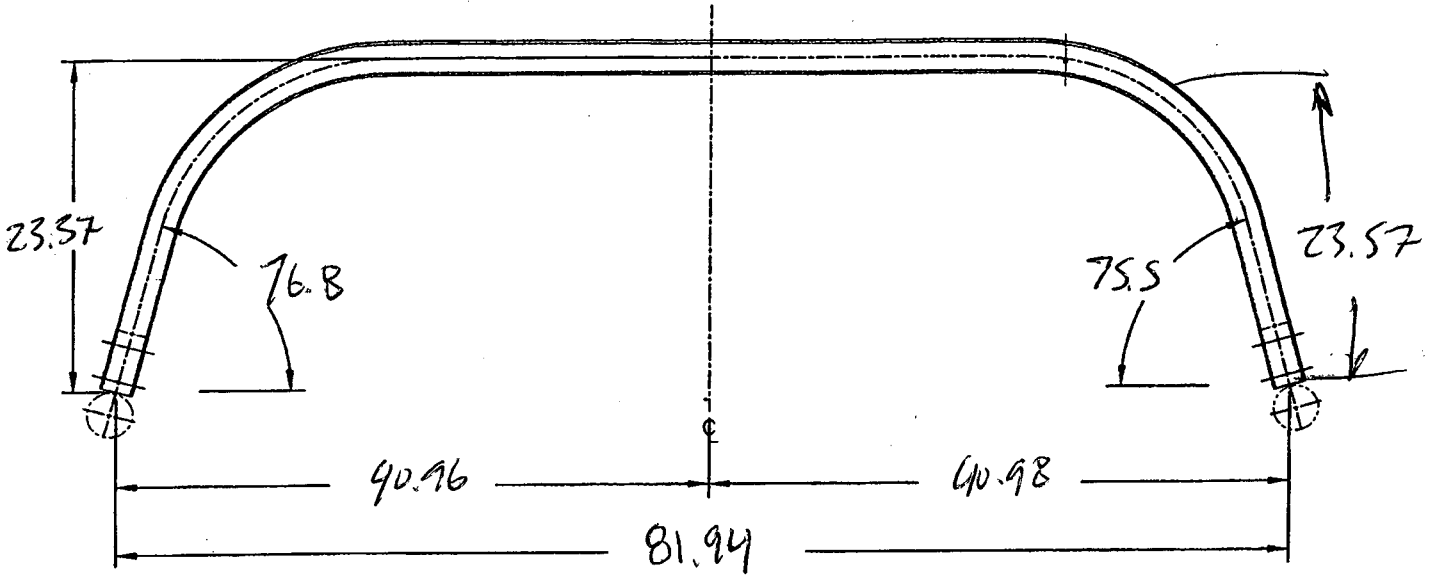

Comments
Crushing: 2.054 - 2.296 = 5.6%
2.072 - 2.319 = 5.6%
Twist = 0.171" # Passes = 39/39

Cut 0.13 - 0.2" FROM HIGH SIDE

11.10.05

QC15 Inspection	
Date	

Rev	Date	Change	Revised by	Approved
A	07.02.06	New Issue	KJ/JM	
B	10.08.23	Dwg Rev updated	KJ	2005-23

2.054

Dart Aerospace Ltd

W/O:		WORK ORDER CHANGES					
DATE	STEP	PROCEDURE CHANGE	By	Date	Qty	Approval Chief Eng / Prod Mgr	Approval QC Inspector

Part No: _____ **PAR #:** _____ **Fault Category:** _____ **NCR:** Yes No **DQA:** _____ **Date:** _____

Resolution: _____ **Disposition:** _____ **QA: N/C Closed:** _____ **Date:** _____

NCR:		WORK ORDER NON-CONFORMANCE (NCR)						
DATE	STEP	Description of NC Section A	Corrective Action Section B			Verification Section C	Approval Chief Eng	Approval QC Inspector
			Initial Chief Eng	Action Description Chief Eng	Sign & Date			

NOTE: Date & initial all entries

DART AEROSPACE LTD	Work Order:	
Description: Crosstube High Fwd (AS350/355)	**Part Number:**	**D350-748-101**
Inspection Dwg: D350-748-141 **Rev:** E		**Page 1 of 1**

Required Dimension	Min	Max
Height	23.13	23.37
1/2 Span	40.78	41.02
Angle	75	77
Total Span	81.56	82.04

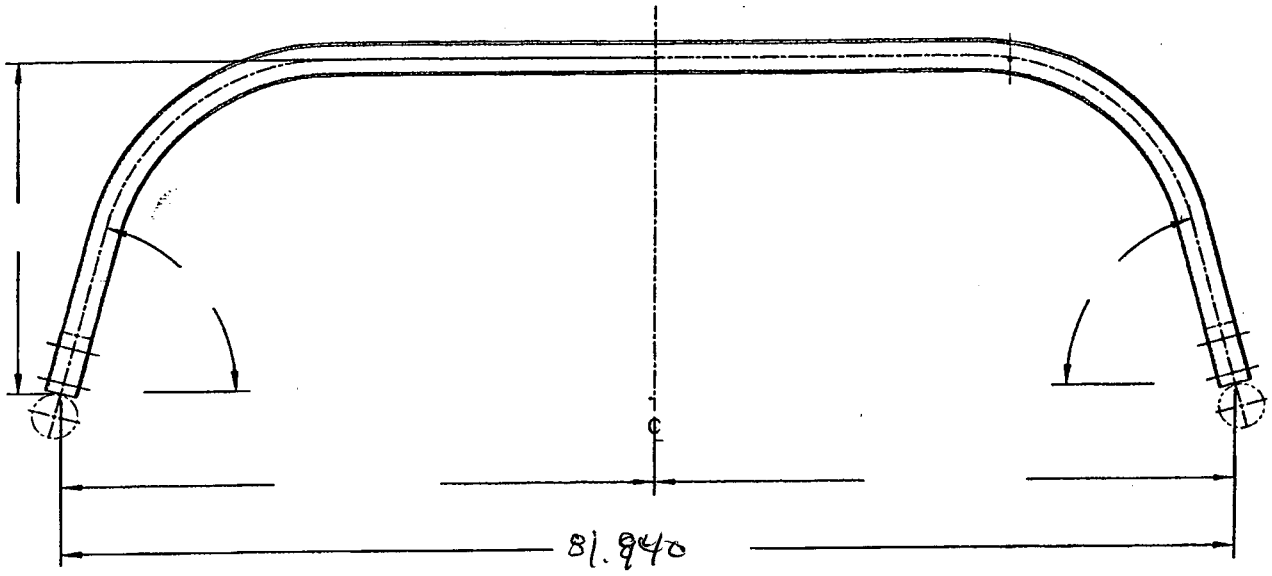

Comments
twist = 0.084

QC15 Inspection	δ
Date	11/10/05

Rev	Date	Change	Revised by	Approved
A	07.02.06	New Issue	KJ/JM	
B	10.08.23	Dwg Rev updated	KJ	2023

Item	Qty -141	Part Number	Description
1	X	D350-748-141	CROSSTUBE ASSEMBLY (AS 350/355 HI FWD)
2	1	D6015-125	CROSSTUBE (OR D6017-115)
3	2	D3502-1	SUPPORT
4	2	D2856-400-710	ABRASION STRIP
5	1	AELS-1032-225	INSERT
6	1	NAS1149D0363J	WASHER (OR AN960JD10)
7	2	MS21920-20	CLAMP (PER DART SPEC. M-MS21920-20)
8	1	MS27039-1-10	SCREW

SHOP COPY
RETURN TO
ENGINEERING
UNCONTROLLED COPY
SUBJECT TO AMENDMENT
WITHOUT NOTICE
WORK ORDER
NO. 66924
RS 11-03-2

RELEASED
2011-03-18

GENERAL NOTES:

1) MATERIAL: MANUFACTURED FROM D6015-125 OR D6017-115
FINISHED LENGTH = 110.270±0.06
2) FINISH: MAGNETIC PARTICLE INSPECT PER DART QSI 038 4.2
CADMIUM PLATE PER AMS-QQ-P-416B, CLASS 1, TYPE II
PRIME INSIDE AND OUTSIDE PER DART QSI 005 4.2
PAINT OUTSIDE PER DART QSI 005 4.2
3) TOLERANCES ARE PER DART QSI 018 UNLESS OTHERWISE NOTED.
4) UNITS: INCHES UNLESS OTHERWISE NOTED.
5) BREAK SHARP EDGES: 0.005 TO 0.010 MAX.
6) IDENTIFICATION: DART PART NUMBER "D350-748-141" AND BATCH NUMBER ON INSIDE OF CUFF PER DART QSI 044 6.4 (VIBRATING STYLUS)
7) WEIGHT: 30.45 lbs
8) PART IS SYMMETRIC ABOUT CENTERLINE, EXCEPT FOR Ø0.297 HOLE.
9) BLEND OUT ALL EDGES FROM MACHINING LONGITUDINALY, TRANSITION SHOULD BE SMOOTH. NOTE: ALL HOLES ARE DRILLED AFTER BENDING.
10) BEND PROGRESSIVELY WITH A MINIMUM OF 7 PASSES. MAXIMUM TUBE FLATTENING DUE TO BENDING IS 6% BASED ON O.D.
11) HEAT TREAT TO MIN. 180 KSI PER MIL-T-6736 OR AMS 2759-1C AFTER TURNING. ACCEPTABLE TO VERIFY TENSILE STRENGTH BY HARDNESS TEST PER ASTM E18 TO 40-45 HRC.
12) INSTALL D2856-400-710 ABRASION STRIPS WITH A GAP ON BOTTOM SIDE OF CROSSTUBE, CENTERED OPPOSITE D3502-1 SUPPORT, PER QSI 035.
13) EXTREME CARE MUST BE TAKEN TO PROTECT THE OUTSIDE SURFACE OF THE TUBE. THE OUTSIDE SURFACE MUST BE SMOOTH AND FREE FROM SURFACE DEFECTS SUCH AS SCRATCHES, NICKS, OR DENTS. DEFECTS UP TO 0.005" MAY BE BLENDED OUT LONGITUDINALLY. CIRCUMFERENTIAL GRIND MARKS ARE UNACCEPTABLE. WHEN DRILLING HOLES EXTREME CARE MUST BE TAKEN AND CAREFUL DEBURRING PERFORMED TO ENSURE A CLEAN HOLE WITH NO CRACKING/CHIPPING/GROOVES.
14) TORQUE CLAMPS 60 TO 80 IN-LB. ENSURE AT LEAST 1.5 THREADS SHOWING IN SAFETY AND THAT NUT HAS NOT BOTTOMED-OUT AFTER TORQUING.
15) MAX TWIST AFTER BENDING: WITH XTUBE LAYED FLAT ON SURFACE, THE DIFFERENCE BETWEEN CUFF HEIGHTS FROM THE SURFACE MAY BE NO LARGER THAN 0.25 (ZN C1-3).

REV.	DESCRIPTION	BY	DATE
F	ADD HRC TEST OPTION (B8-1) PER PAR 09-040, ADD TWIST LIMIT (A8-1, C1-3), ADD D6015-125 OPTION (C8-1), STOCK DIM NOW MACHINED (D1-4)	CP	10.11.23
E	REVISE GENERAL NOTES; UPDATE TO CURRENT ADD STANDARDS; RELOCATED FLAG #6 PER PAR 08-046 (ZN A6-3); TOLERANCES (ZN C6-3, D1-3)	RF	09.09.30
D	MAG. PARTICLE AND CAD PLATE AS MFD.	CP	06.10.31
C	ADD CAD PLATING	CP	06.08.14
B	ADD D6017-115 & PRIME AND PAINT	CP	06.06.30
A	NEW ISSUE	CP	06.03.31

DESIGN		DART AEROSPACE LTD HAWKESBURY, ONTARIO, CANADA	
DRAWN			
CHECKED		DRAWING NO.	REV. F
MFG. APPR.		D350-748-141	SHEET 1 OF 4
APPROVED		TITLE	SCALE
DE APPR.		CROSSTUBE (AS 350/355 HI FWD)	NTS
DATE	10.11.23		

COPYRIGHT © 2006 BY DART AEROSPACE LTD
THIS DOCUMENT IS PRIVATE AND CONFIDENTIAL AND IS SUPPLIED ON THE EXPRESS CONDITION THAT IT IS NOT TO BE USED FOR ANY PURPOSE OR COPIED OR COMMUNICATED TO ANY OTHER PERSON WITHOUT WRITTEN PERMISSION FROM DART AEROSPACE LTD.

Dart Aerospace Ltd

W/O:		WORK ORDER CHANGES					
DATE	STEP	PROCEDURE CHANGE	By	Date	Qty	Approval Chief Eng / Prod Mgr	Approval QC Inspector

Part No: _____ **PAR #:** _____ **Fault Category:** _____ **NCR:** Yes No **DQA:** _____ **Date:** _____

Resolution: _____ **Disposition:** _____ **QA: N/C Closed:** _____ **Date:** _____

NCR:		WORK ORDER NON-CONFORMANCE (NCR)						
DATE	STEP	Description of NC Section A	Corrective Action Section B			Verification Section C	Approval Chief Eng	Approval QC Inspector
			Initial Chief Eng	Action Description Chief Eng	Sign & Date			

NOTE: Date & initial all entries

H:\fFORMS\Quality Assurance\approved QA\NCRWO RevE

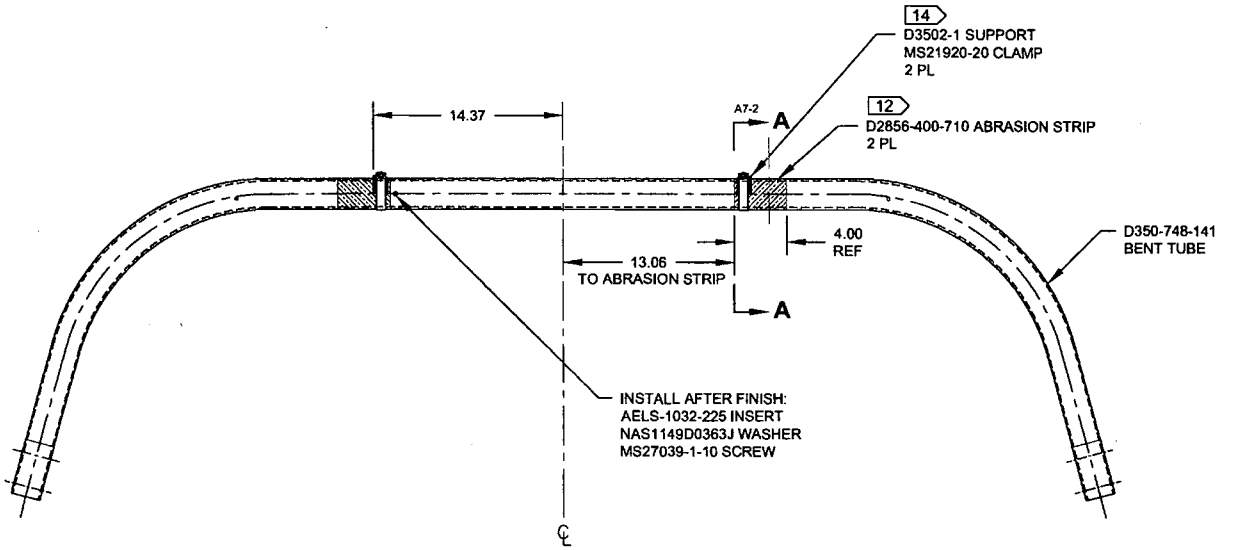

D350-748-141
ASSEMBLY DETAIL

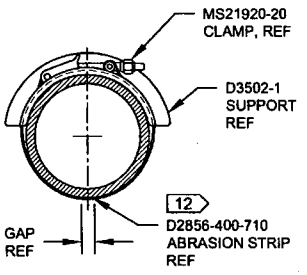

SECTION A-A D4-2
SCALE 4X

W066924

RELEASED
2011 -01- 18

DESIGN		**DART AEROSPACE LTD** HAWKESBURY, ONTARIO, CANADA	
DRAWN			
CHECKED		DRAWING NO.	REV. F
MFG. APPR.		D350-748-141	SHEET 2 OF 4
APPROVED		TITLE	SCALE
DE APPR.		CROSSTUBE (AS 350/355 HI FWD)	NTS
DATE	10.11.23		

COPYRIGHT © 2006 BY DART AEROSPACE LTD
THIS DOCUMENT IS PRIVATE AND CONFIDENTIAL AND IS SUPPLIED ON THE EXPRESS CONDITION THAT IT IS NOT TO BE USED FOR ANY PURPOSE OR COPIED OR COMMUNICATED TO ANY OTHER PERSON WITHOUT WRITTEN PERMISSION FROM DART AEROSPACE LTD.

Dart Aerospace Ltd

W/O:		WORK ORDER CHANGES					
DATE	STEP	PROCEDURE CHANGE	By	Date	Qty	Approval Chief Eng / Prod Mgr	Approval QC Inspector

Part No: _____ **PAR #:** _____ **Fault Category:** _____ **NCR:** Yes No **DQA:** _____ **Date:** _____

Resolution: _____ **Disposition:** _____ **QA: N/C Closed:** _____ **Date:** _____

NCR:		WORK ORDER NON-CONFORMANCE (NCR)						
DATE	STEP	Description of NC Section A	Corrective Action Section B			Verification Section C	Approval Chief Eng	Approval QC Inspector
			Initial Chief Eng	Action Description Chief Eng	Sign & Date			

NOTE: Date & initial all entries

H:\fFORMS\Quality Assurance\approved QA\NCRWO RevE

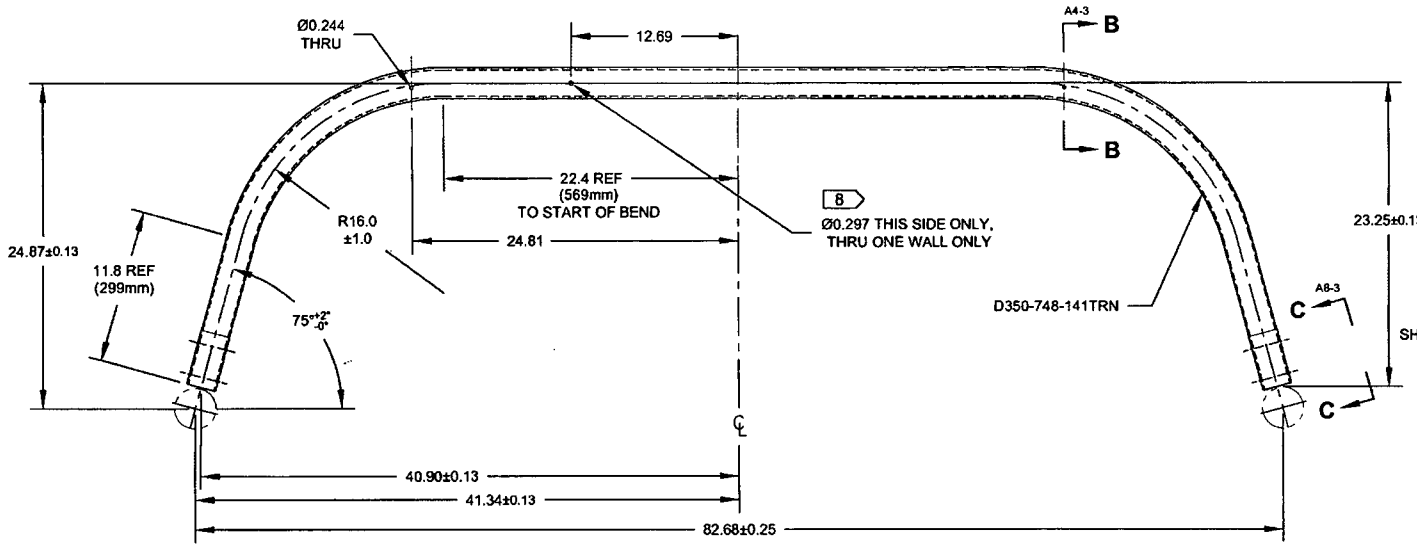

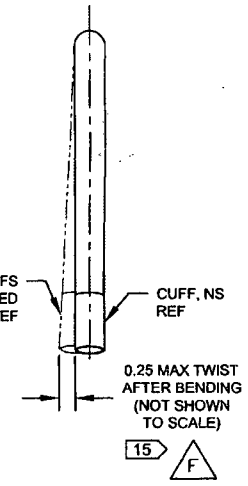

D350-748-141
BENDING AND DRILLING DETAIL 10

w/o 46929

RELEASED
2011 -01- 18

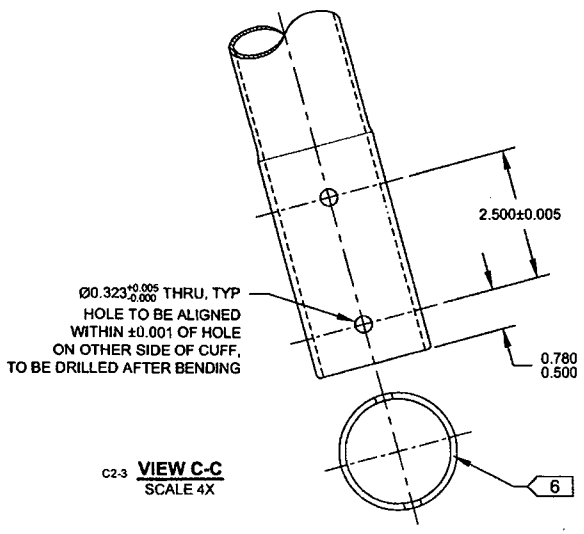

C2-3 **VIEW C-C**
SCALE 4X

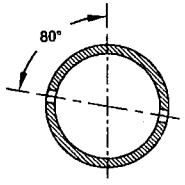

SECTION B-B D3-3
SCALE 4X

DESIGN		**DART AEROSPACE LTD** HAWKESBURY, ONTARIO, CANADA
DRAWN		
CHECKED		DRAWING NO. D350-748-141 — REV. F — SHEET 3 OF 4
MFG. APPR.		
APPROVED		TITLE: CROSSTUBE (AS 350/355 HI FWD) — SCALE: NTS
DE APPR.		
DATE	10.11.23	

COPYRIGHT © 2006 BY DART AEROSPACE LTD
THIS DOCUMENT IS PRIVATE AND CONFIDENTIAL AND IS SUPPLIED ON THE EXPRESS CONDITION THAT IT IS NOT TO BE USED FOR ANY PURPOSE OR COPIED OR COMMUNICATED TO ANY OTHER PERSON WITHOUT WRITTEN PERMISSION FROM DART AEROSPACE LTD.

Dart Aerospace Ltd

W/O:		WORK ORDER CHANGES					
DATE	STEP	PROCEDURE CHANGE	By	Date	Qty	Approval Chief Eng / Prod Mgr	Approval QC Inspector

Part No: _____ **PAR #:** _____ **Fault Category:** _____ **NCR:** Yes No **DQA:** _____ **Date:** _____

Resolution: _____ **Disposition:** _____ **QA: N/C Closed:** _____ **Date:** _____

NCR:		WORK ORDER NON-CONFORMANCE (NCR)						
DATE	STEP	Description of NC Section A	Corrective Action Section B			Verification Section C	Approval Chief Eng	Approval QC Inspector
			Initial Chief Eng	Action Description Chief Eng	Sign & Date			

NOTE: Date & initial all entries

H:\fFORMS\Quality Assurance\approved QA\NCRWO RevE

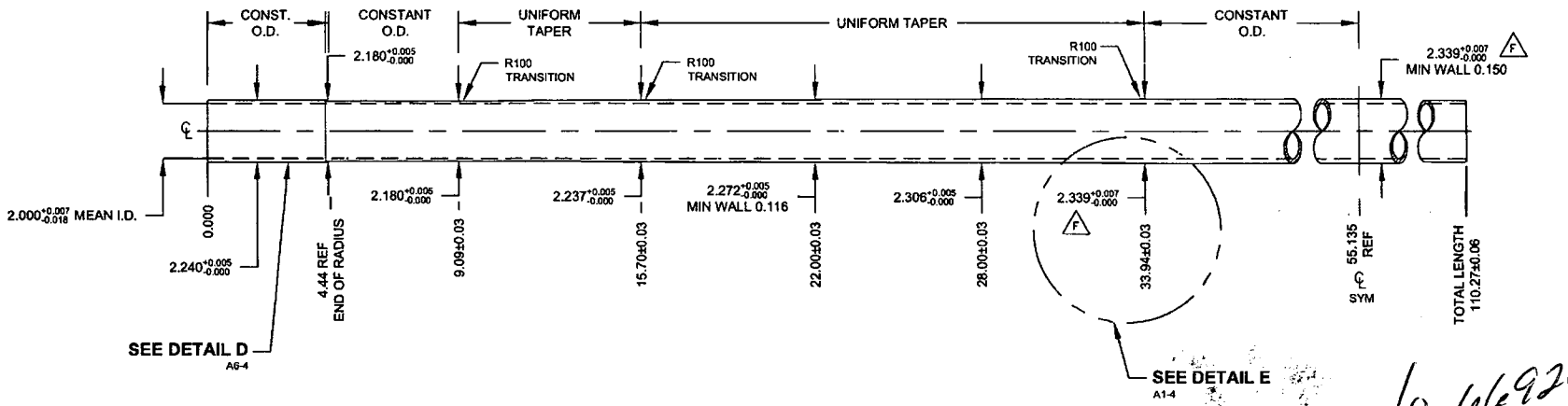

u/o 66924

D350-748-141TRN
TURNING DETAIL

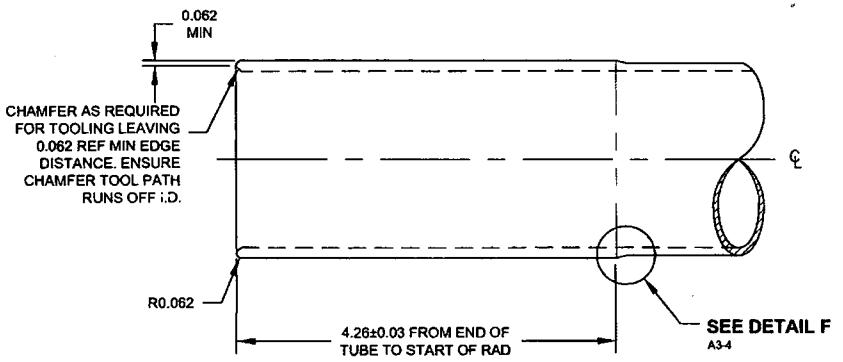

DETAIL D:
CROSSTUBE CUFF C7-4
SCALE 3X

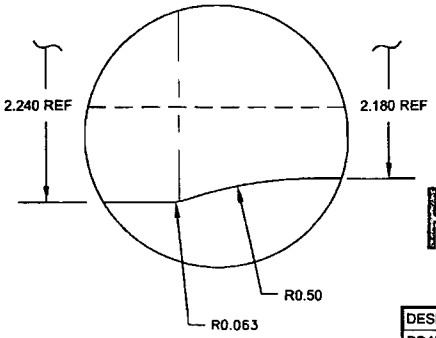

DETAIL F:
CUFF TRANSITION A5-4
NOT TO SCALE

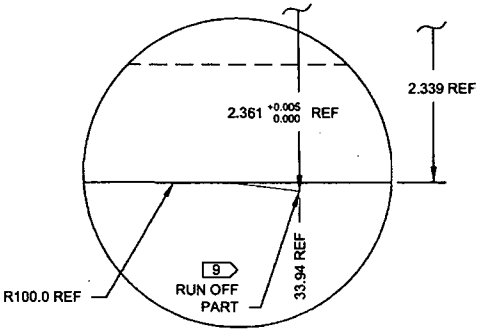

RELEASED
2011 -01- 18

DETAIL E:
TAPER RUN-OFF C3-4
NOT TO SCALE

DESIGN		**DART AEROSPACE LTD** HAWKESBURY, ONTARIO, CANADA
DRAWN		
CHECKED		DRAWING NO. D350-748-141 — REV. F — SHEET 4 OF 4
MFG. APPR.		
APPROVED		TITLE: CROSSTUBE (AS 350/355 HI FWD) — SCALE: NTS
DE APPR.		
DATE	10.11.23	

COPYRIGHT © 2006 BY DART AEROSPACE LTD
THIS DOCUMENT IS PRIVATE AND CONFIDENTIAL AND IS SUPPLIED ON THE EXPRESS CONDITION THAT IT IS NOT TO BE USED FOR ANY PURPOSE OR COPIED OR COMMUNICATED TO ANY OTHER PERSON WITHOUT WRITTEN PERMISSION FROM DART AEROSPACE LTD

Dart Aerospace Ltd

W/O:		WORK ORDER CHANGES					
DATE	STEP	PROCEDURE CHANGE	By	Date	Qty	Approval Chief Eng / Prod Mgr	Approval QC Inspector

Part No: _____ **PAR #:** _____ **Fault Category:** _____ **NCR:** Yes No **DQA:** _____ **Date:** _____

Resolution: _____ **Disposition:** _____ **QA: N/C Closed:** _____ **Date:** _____

NCR:		WORK ORDER NON-CONFORMANCE (NCR)						
DATE	STEP	Description of NC Section A	Corrective Action Section B			Verification Section C	Approval Chief Eng	Approval QC Inspector
			Initial Chief Eng	Action Description Chief Eng	Sign & Date			

NOTE: Date & initial all entries

5.0 PARTS LIST

Qty -101	Qty -201	Part Number	Description
X		**D350-748-101**	**CROSSTUBE INSTALLATION, AS 350/355 HIGH FWD**
	X	**D350-748-201**	**CROSSTUBE INSTALLATION, AS 350/355 HIGH AFT**
1		D350-748-141	CROSSTUBE ASSEMBLY, AS 350/355 HIGH FWD
	1	D350-748-241	CROSSTUBE ASSEMBLY, AS 350/355 HIGH AFT
*2	*2	D3502-1	SUPPORT
*2	*2	D2856-400-710	ABRASION STRIP
*1	*1	AELS-1032-225	INSERT
*2	*2	MS21920-20	CLAMP
*1	*1	MS27039-1-10	SCREW
*1	*1	AN960JD10	WASHER
4	4	D3500-1	SADDLE
16	16	D3501-1	BUSHING
16	16	AN4-6A	BOLT
8	8	AN4-41A	BOLT
4	4	AN5-32A	BOLT
32	32	AN960JD416	WASHER
8	8	AN960JD516	WASHER
24	24	MS21042L4	NUT (OR MS21042-4)
4	4	MS21042L5	NUT (OR MS21042-5)

* REFERENCE ONLY. PARTS ARE INCLUDED IN D350-748-141/241 ASSEMBLIES ABOVE

• COPYRIGHT © 2006 BY DART AEROSPACE LTD •
THIS DOCUMENT IS PRIVATE AND CONFIDENTIAL AND IS SUPPLIED ON THE EXPRESS CONDITION THAT IT IS NOT TO BE USED FOR ANY PURPOSE OR COPIED OR COMMUNICATED TO ANY OTHER PERSON WITHOUT WRITTEN PERMISSION FROM DART AEROSPACE LTD.

CERTIFICATE OF
CONFORMANCE

CADORATH PLATING CO. LTD.
2150 LOGAN AVENUE
WINNIPEG, MANITOBA R2J-0J1

DATE: Oct-28-2011

CONSIGNED TO: Dart Aerospace Ltd.
1270 Aberdeen St.
Hawksbury, ON K6A 1K7

W/O #: 108673

INVOICE #: 57422

CONTRACT OR
PURCHASE ORDER # 15117

DESCRIPTION: SKID

QTY 1

P/N # d350-748-101

S/N # B66924

STRESS RELIEF @ 375 DEG. 5 HRS BAKE HEAT CHART # 11-1084. MPI INSPECTED IAW ASTM-E-1444. CADMIUM PLATED IAW AMS-QQ-P-416C, TYPE 2 YELLOW, CLASS 1. HYDROGEN EMBRITTLEMENT @ 375 DEG. 8 HRS. BAKE HEAT CHART #11-1095.

CERTIFICATE: I certify that the items indicated here on have been inspected and tested and conform to all specifications and requirements detailed on the contract or purchase order.

Approved Inspector: CP 2

HELITRADES INC.

P.O. Box 162, 18 Terry Fox Drive
Vankleek Hill, Ontario
K0B 1R0, Canada
TEL (613) 678-3027 FAX(613) 678-2776
Email: helitrad@hawk.igs.net
GST# R102320439

PACKING SLIP: **H17886**

DATE: 08-Nov-2011
CUSTOMER P.O. 15391
CUSTOMER I.D.: DART AEROSPACE
DATE ITEM RECEIVED: 07-Nov-2011

SOLD TO: DART AEROSPACE
1270 ABERDEEN STREET

HAWKESBURY K6A 1K7
LINDA/MELANIE

SHIP TO:

Part Number: UNKNOWN
Description: CROSSTUBE
Component ID: 206-13

Serial Number: UNKNOWN

Removed From: UNKNOWN

SHIP VIA:

WAYBILL #:

---

1. Approving Civil Aviation Authority/Country	2.	3. Form tracking No.
Transport Canada	AUTHORIZED RELEASE CERTIFICATE FORM ONE	HTV-2998 Page 1 of 1

4. Approved organization name and address	5. Work order/contract/invoice
HELITRADES INC. 18 Terry Fox Drive, Vankleek Hill, Ontario, K0B 1R0, Canada	H-17886

6. Item	7. Description	8. Part No.	9. Qty	10. Serial/Batch No.	11. Status/work
1	CROSS TUBE	D350-748-101 B66924	1	N.S.N.	REPAIRED

12. Remarks

TOUCH UP BRUSH CADMIUM APPLIED.

DOCUMENTATION FOR ALL WORK PERFORMED IS AVAILABLE ON FILE UNDER HELITRADES W/O SPECIFIED IN BLOCK # 5.

13a. Certifies that the items identified above were manufactured in conformity to:	14a.
☐ Approved design data and are in condition for safe operation. ☐ Non approved design data specified in block 12.	☑ CAR 571.10 Maintenance Release. ☐ Other regulations specified in block 12. Certifies that, except where otherwise specified in block 12, the work identified in block 11 and described in block 12 was performed in accordance with the Canadian Aviation Regulations.

13b. Signature	13c. Approved Organization Number	14b. Signature	14c. Approved Organization Number
		HELITRADES INC	AMO 3/86
13d. Name	**13e. Date (dd/mm/yyyy)**	**14d. Name**	**14e. Date (dd/mm/yyyy)**
		GERALD TOM	8 NOV. 2011

"This certificate does not constitute authority to install.
Installers working in accordance with the national regulations of a country other than that specified in block 1 must ensure that their regulations recognize certifications from the country specified.
Statements in blocks 13a or 14a do not constitute installation certification. In all cases, the technical record for the aircraft must contain an installation certification issued in accordance with the applicable national regulations before the aircraft may be flown."

(Previously form 24-0078)

RAPPORT D'INSPECTION PAR RESSUAGE

P - 11134

CUREN

PAGE 1 DE 2

NT: Dart Aerospace
ENTION: Mme Linda Lacelle.
ESSE: 1270 Aberdeen st, Hawkesbury, Ont. K6A 1K7

DATE: 3 novembre 2011 HEURE AM ☒ PM ☐
Nº TRAVAIL ACUREN: 188-11-02386
Nº CLIENT PO/WO: 153591
SITE DE TRAVAIL: Dart Usine
ACCEPTATION STD. ASTM 1417/QS1038 DATE/RÉV. 2005

JET: Crosstubes Inspection (Fluorescent Penetrant)
(S) EXAMINÉ: 12 x crosstubes (5x steel 7x Aluminium)

SCRIPTION DES TRAVAUX | Nº PROCÉDURE LT-002 DATE/RÉV. 2007 | Nº TECHNIQUE LT-002-XX DATE/RÉV. 2007

TEMS: See other sheet MATÉRIEL: Steel - Aluminium ÉPAISSEUR: —
RIPTION: Inspection 100% Fluorescent on surface external on 12x crosstubes.

TAILS DES INSPECTIONS

HODE: ☑ FLUORESCENT ☐ VISIBLE
QUE: Magnaflux
ÉTRANT: Zyglo ZL 67 — TEMPS PÉNÉTRATION MIN. 10 MIN.
OLVANT PÉNÉTRANT: H20 — TEMPS SÉCHAGE MIN. >10 MIN.
ÉLATEUR: SKD S2 — TEMPS PÉNÉTRATION MIN. 10 MIN.
RÉVÉLATEUR: ☑ NON AQUEUX ☐ AQUEUX ☐ SEC

☑ LAVABLE À L'EAU ☐ MÉTHODE DISSOLVANT ☐ PRÉ-ÉMULSIONNANT
LUM. NOIRE S/N 16440 ☑ PUISS. > 1000 µ W/CM² ☐ AMBIANT < 2 fc
ÉQUIP. LUMIÈRE ☐ LAMP.POCHE ☐ LAMP.CULASSE ☐ PUISS.>100 fc @ SURFACE
AUTRES: Modele Labino
MÈTRE LUM. N/S DATE CAL DUE

RFACE INSPECTÉE

DITION SURFACE: ☐ MEULÉE ☐ SOUDÉE ☐ MACHINÉE ☐ GRENAILLÉE ☑ MÉTAL PROPRE
PÉRATURE SURFACE: ☐ < - 4°C/ 20°F ☐ - 4°C/ 20°F DE 10°C/50°F ☑ 10°C/50°F DE 52°C/125°F ☐ > 52°C/125°F

SULTATS- (☐ MÉTRIQUE ☐ IMPÉRIAL)

See other sheet for Results

1 11-11-03

lue des Services

nte selon laquelle le Groupe Acuren Inc. exécute les services ne concerne que les énoncés par écrit. En aucune circonstance ces services ne s'étendent au-delà de l'exécution des services demandés. Il est entendu que toutes les ptions, les observations et les expressions d'opinions faites par Acuren reflètent les opinions ou les observations de l'entreprise fondées sur l'information et les hypothèses fournies par le propriétaire/opérateur, et elles ne constituent s déclarations ou des garanties ou ne peuvent être interprétées comme constituant. Le Groupe Acuren Inc. n'assume aucune des responsabilités du propriétaire/opérateur, et le propriétaire/opérateur conserve la responsabilité des décisions prises en matière d'ingénierie, de fabrication, de réparation et d'usage à partir de l'information ou des données fournies par Acuren en rapport avec les services décrits dans les présentes ne peuvent excéder le coût des ss rendus.

e de Diligence

'exécution des services, le Groupe Acuren Inc. applique le degré de diligence, le soin et la compétence normalement exercés dans des circonstances semblables par d'autres fournisseurs de ce type de services opérant dans la même é ou dans une localité similaire. Aucune autre garantie, implicite ou explicite, n'est faite ou voulue par le Groupe Acuren Inc.

NATURES

RÉSENTANT: Ron Tilley (MOULÉ) — Ron Tilley (SIGNATURE)
HNICIEN (SIGNATURE): [signature]
M (MOULÉ): Pierre-Luc Dufour

1ER TECHNICIEN: ONGC NIVEAU 2 SNT NIVEAU 2 ONGC Nº REG. 12205
2IEME TECHNICIEN: ONGC NIVEAU ____ SNT NIVEAU ____ ONGC Nº REG. ____

FTJ#
RAPPORT RÉVISÉ PAR:
NOM INITIALES

H-3044

BLANCHE – COPIE DU CLIENT JAUNE – COPIE DU BUREAU ROSE – COPIE DU TECHNICIEN OR – COPIE DU BUREAU

PT Décembre 2005

ACUREN

RAPPORT D'ESSAI NON DESTRUCTIF

(SUITE)

RAPPORT# P 11134

CLIENT: DART AEROSPACE — DATE: 2 novembre 2011 — HEURE: ☒ AM ☐ PM

ATTENTION: Mme Linda Lucelle — NO. TRAVAIL ACUREN: 188-11-02386

RÉSULTATS (☐ METRIQUE ☐ IMPÉRIAL)

STEEL Crosstubes:

Work order ID			66922	Item ID		D350-748-101		
2) "	"	"	74646	"	"	"	"	"
3) "	"	"	66921	"	"	"	"	"
4) "	"	"	66924	"	"	"	"	"
5) "	"	"	74658	"	"	"	"	"

Aluminium Crosstubes:

1) Work order ID			75603	Item ID		D 212-664-101		
2) "	"	"	75604	"	"	"	"	"
3) "	"	"	75800	"	"	D 212-664-207		
4) "	"	"	75801	"	"	"	"	"
5) "	"	"	75985	"	"	D 212-664-201		
6) "	"	"	75417	"	"	D 412-664-203		
7) "	"	"	75416	"	"	"	"	"

- All the Crosstubes (12) Accepted
- No linear indication as found.

Étendue des Services

L'entente selon laquelle le Groupe Acuren Inc. exécute les services ne concerne que les énoncés par écrit. En aucune circonstance ces services ne s'étendent au-delà de l'exécution des services demandés. Il est entendu que toutes les descriptions, les observations et les expressions d'opinions faites par Acuren reflètent les opinions ou les observations de l'entreprise fondées sur l'information et les hypothèses fournies par le propriétaire/opérateur, et elles ne constituent pas des déclarations ou des garanties ou ne peuvent être interprétées comme constituant. Le Groupe Acuren Inc. n'assume aucune des responsabilités du propriétaire/opérateur, et le propriétaire/opérateur conserve la responsabilité entière des décisions prises en matière d'ingénierie, de fabrication, de réparation et d'usage à partir de l'information ou des données fournies par Acuren en rapport avec les services décrits dans les présentes ne peuvent excéder le coût des services rendus.

Norme de Diligence

Dans l'exécution des services, le Groupe Acuren Inc. applique le degré de diligence, le soin et la compétence normalement exercés dans des circonstances semblables par d'autres fournisseurs de ce type de services opérant dans la même localité ou dans une localité similaire. Aucune autre garantie, implicite ou explicite, n'est faite ou voulue par le Groupe Acuren Inc.

SIGNATURES

REPRÉSENTANT À LA CLIENTÈLE: Leon Titley (MOULÉE) — SIGNATURE

TECHNICIEN (SIGNATURE):

NAME (MOULÉE): Pierre-Luc Dufour

1er TECHNICIEN — NIVEAU CGSB 2 — NIVEAU SNT 2 — NO. ENREG. CGSB 12205

2e TECHNICIEN — NIVEAU CGSB ___ — NIVEAU SNT ___ — NO. ENREG. CGSB ___

FTJ #:

RAPPORT REVISÉ PAR: NOM — INITIALES

H-3050

BLANCHE – COPIE DU CLIENT JAUNE – COPIE DU BUREAU ROSE – COPIE DU TECHNICIEN OR – COPIE DU BUREAU